Datasheet

Quasar 200 200kN Advanced Universal Testing Machines

TQ01.07
TQ01.07.01

The 200 kN Quasar is the product of state of the art design, built to the highest quality levels and has many advanced technical features.

Programming tests and monitoring results can be controlled through our powerful and Intelligent Graphwork test software, which allows complete and accurate data management in accordance with European, North American and International Standards.

This instrument is suitable for use both in production lines where the operator has to be fast and efficient and can accurately control the test with the optional remote control unit and also laboratory environments where the advanced software lets users analyse the test data. Graphwork allows full control of processing, filing, managing, and transmitting data to the company network, database, and performs many other functions.

This Quasar frame has a flexible and modular construction. It can be equipped with various grips and fixtures, as well as extensometers, additional load cells, temperature chambers and many more accessories, for a wide range of applications (tensile, compression, flexure, etc.).

In addition, this user-friendly instrument can be fitted with additional load cells with lower capacities, providing the highest resolution and accuracy for micro-loads.

- Two-column rigid system with 200 kN maximum capacity
- Suitable for metals, plastics, composites and other materials
- Stylish design and advanced features
- Ergonomic design
- Flexible and modular design for easy future expansion
- Key technical advantages include extremely high resolution of load and stroke readings, as well as minimum test speed of 0.0005mm/min, for the high performance and most accurate results
- Manufactured by an ISO 9001 certified company
- Excellent price-to-quality ratio

Universal testing machine Quasar 200
with special grip ,"Micron Motor" extensometer,
safety barrier and touch screen monitor

EtherCAT

Ethernet connection

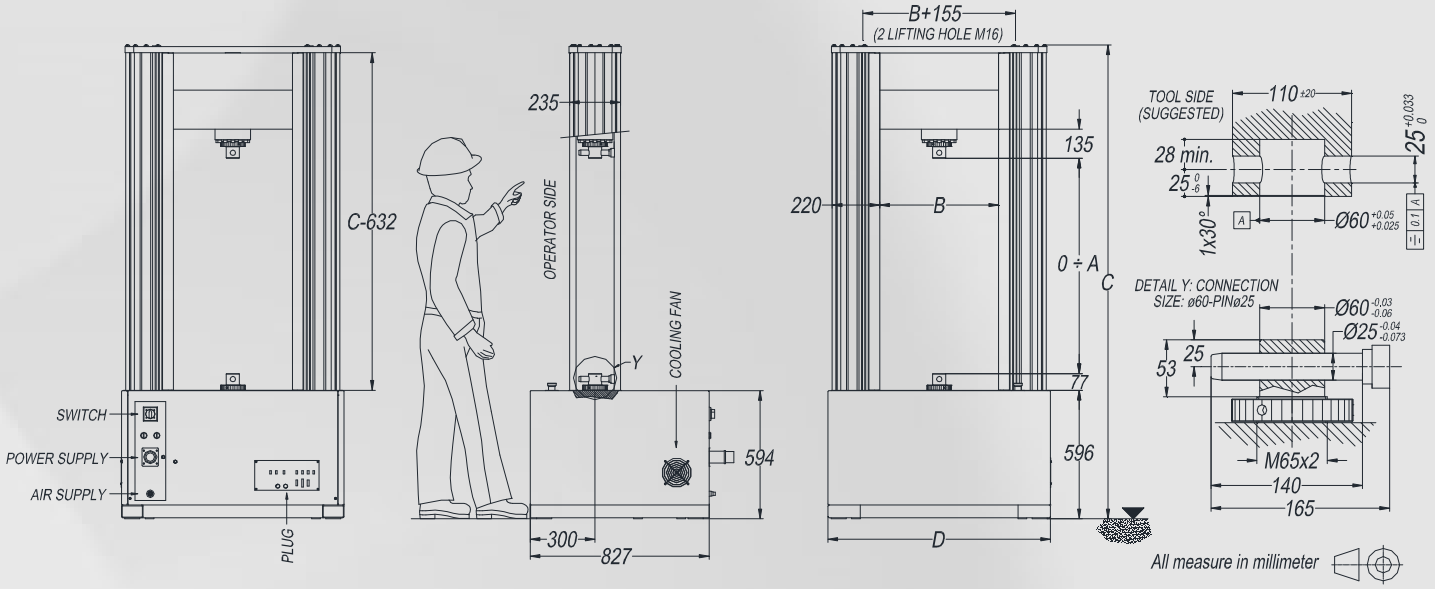

TECHNICAL SPECIFICATIONS:

ITEM		TQ01.07 (10)	TQ01.07.01 (10)
Capacity of frame and max admissible load		200 kN (44,961 lbf)	
Load cell nominal size (tensile & compression)		250 kN (1)	
Max accidental overload (11) / breaking load		375 kN / 750 kN (1)	
Standards met or exceeded		ISO 7500-1, ASTM E4, EN 10002-2, JIS B7721, GB/T 16825.1, DIN 51221, BS 1610 and other equivalent	
Load cell reading resolution		Over 3 million division (24 bit A/D converter)	
Stroke resolution		0,0015 µm/Impuls	
Speed at maximum load (in test)		0.0005 ÷ 500 mm/min.	
Idle speed		500 mm/min.	
Accuracy of positioning repeatability		0.002 mm (2 µm)	
Total stroke (Dimension A)		1,000 mm (39.37 in.)	**1,500 mm (59.05 in.)**
Daylight between columns (Dimension B)		550 mm (21.,65 in.)	
Testing area depth		Unlimited (4)	
Power Supply		To be chosen: 220V±10% 50/60Hz or 120V±10% 50/60Hz (other on request) (5)	
Power Rating		3,000 W	
Machine weight (without accessories)		730 Kg (1,610 lb)	850 Kg (1,875 lb)
Finishing		Silver RAL 9006 / Black RAL 9011	
Ambient temperature		From +5 to +40 °C	
Air humidity (without condensing)		Max 80%	
Internal data sampling rate		1,000 Hz	
PC data transmission rate		500 Hz	
PC interface		Ethercat (A dedicated Ethernet port on PC is required)	
Dimension:	Height (Dimension C) ± 5 mm	2,198 mm (86.53 in.)	2,747 mm (108.15 in.)
	Width (Dimension D)	1,030 mm (40.55 in.)	
	Depth (6)	827 mm (32.56 in.)	
Size when packed – approx (7) mm		2,550x1,450 H1,350 mm	3,100x1,450 H1,350 mm
Noise level		< 72 db	
Suggested light local level		300 lux	

(1) Data of standard load cell. See below for other available auxiliary load cell
(4) Some type of extensometers or other devices may reduce this value
(5) Some optional device need a compressed air line (5 bar) or different power supply
(6) Frame dimension. Electrical connectors on the rear of the machine. See drawing
(7) Machines are packed and travel in lying position

Auxiliary load cell (removable)

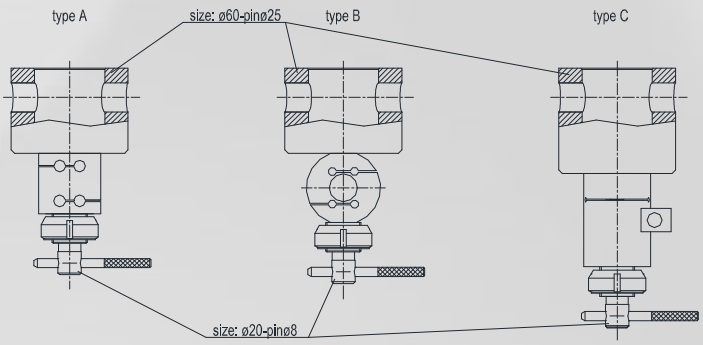

IMPORTANT WARNING:
Using auxiliary load cell in this size of machine require grip with different size connection (ø20 pin ø8)

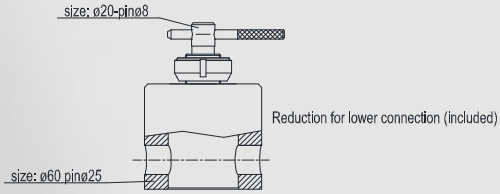

AVAILABLE AUXILIARY LOAD CELL: (8)

ITEM	TQ03.04.01	TQ03.04.01.0A	TQ03.04.01.0B	TQ03.04.02	TQ03.04.03	TQ03.04.03.0A	TQ03.04.04	TQ03.04.05	TQ03.04.06	TQ03.04.07	TQ03.04.08
Nominal size	10 N	20 N	50 N	100 N	250 N	500 N	1 kN	3 kN (12)	5 kN	10 kN	25 kN
Max accidental overload (11) / breaking load	150% of nominal size / 300% of nominal size										
Type (see drawing)	A						B			C	
Kit for use as auxiliary cell (sold separately) (13)	**TQ03.05.02** (generic code, correct load cell must be specified)										

(8) The main load cell is always a 250 KN size. No limit in number of auxiliary load cell to be used under the main one.
All load cell can work in compression and tensile. If certification is required, every load cell (included main one) needs a different one.
(10) Standard 250kN load cell is included in the item of the frame machine
(11) A new calibration of the load cell may be necessary if "max accidental overload" is exceeded.
(12) Max load of TQ03.04.05 load cell is software limited to 2.5 kN.
(13) The kit include female and male connection, pin and locknut (as in draw). Every auxiliary load cell need 1 kit. Using auxiliary cell need grip with connection size ø20 pin ø8.

Cesare Galdabini Spa, Via Giovanni XXIII, 183, 21010 Cardano al Campo (VA), Italy

Ph. ++39.0331.732.700
Fax. ++39.0331.730.650
Mail: info@galdabini.it
Web: www.galdabini.it

Specification are subject to change without prior notice